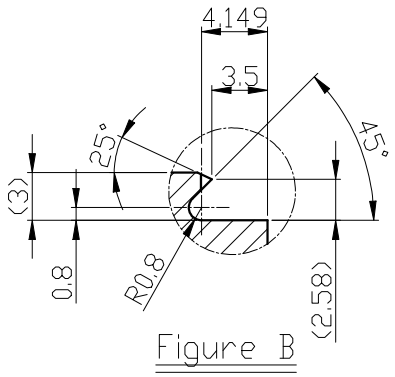

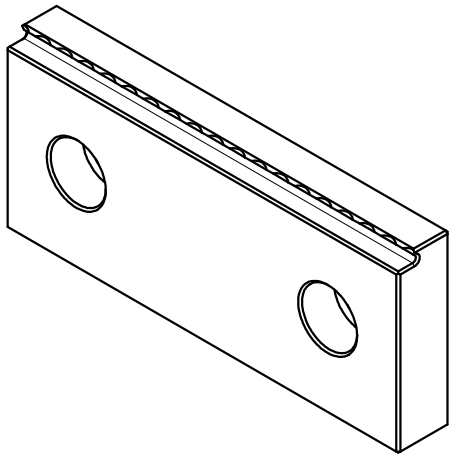

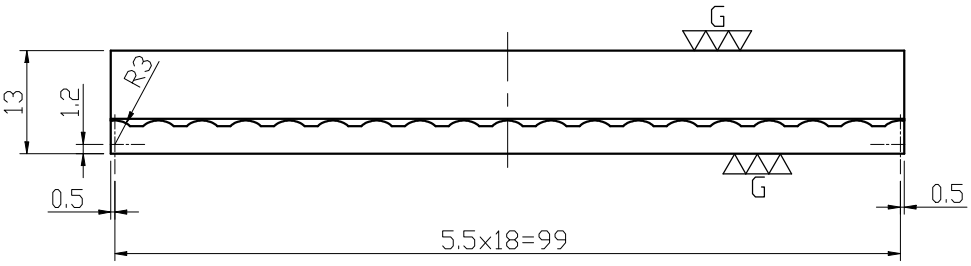

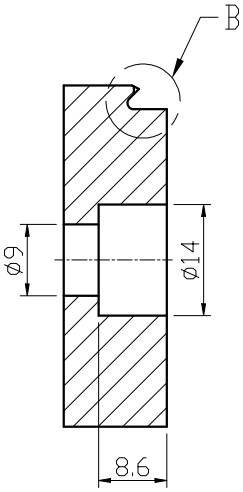

A-A'

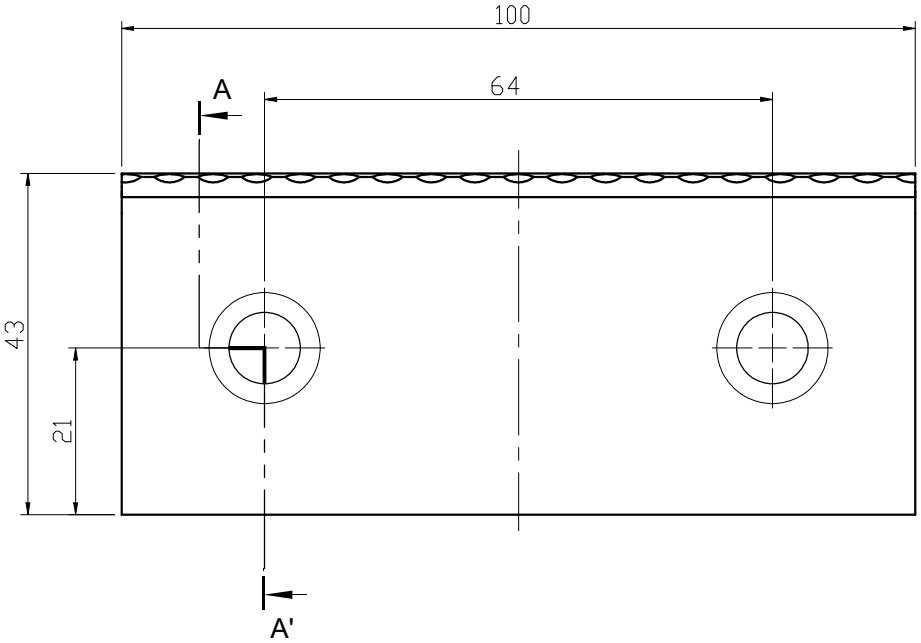

*Hole chamfered C0.5
*Edge chamfered C0.5

Material	Heat treatment	Surface treatment
SNCM21	HRC 56°~60°	Grind after Black Oxide

Drafted by	Checked by	Approved by	Scale	Date	Sheet	Edition
C.Y			1/1	2021.10.18	1/1	A

LEAVE INDUSTRIAL CO., LTD.

TITLE: Serrated Step Jaw

DWG.NO.: SVF-S09-100-3