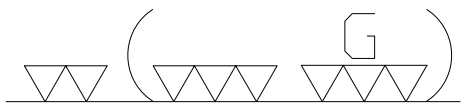

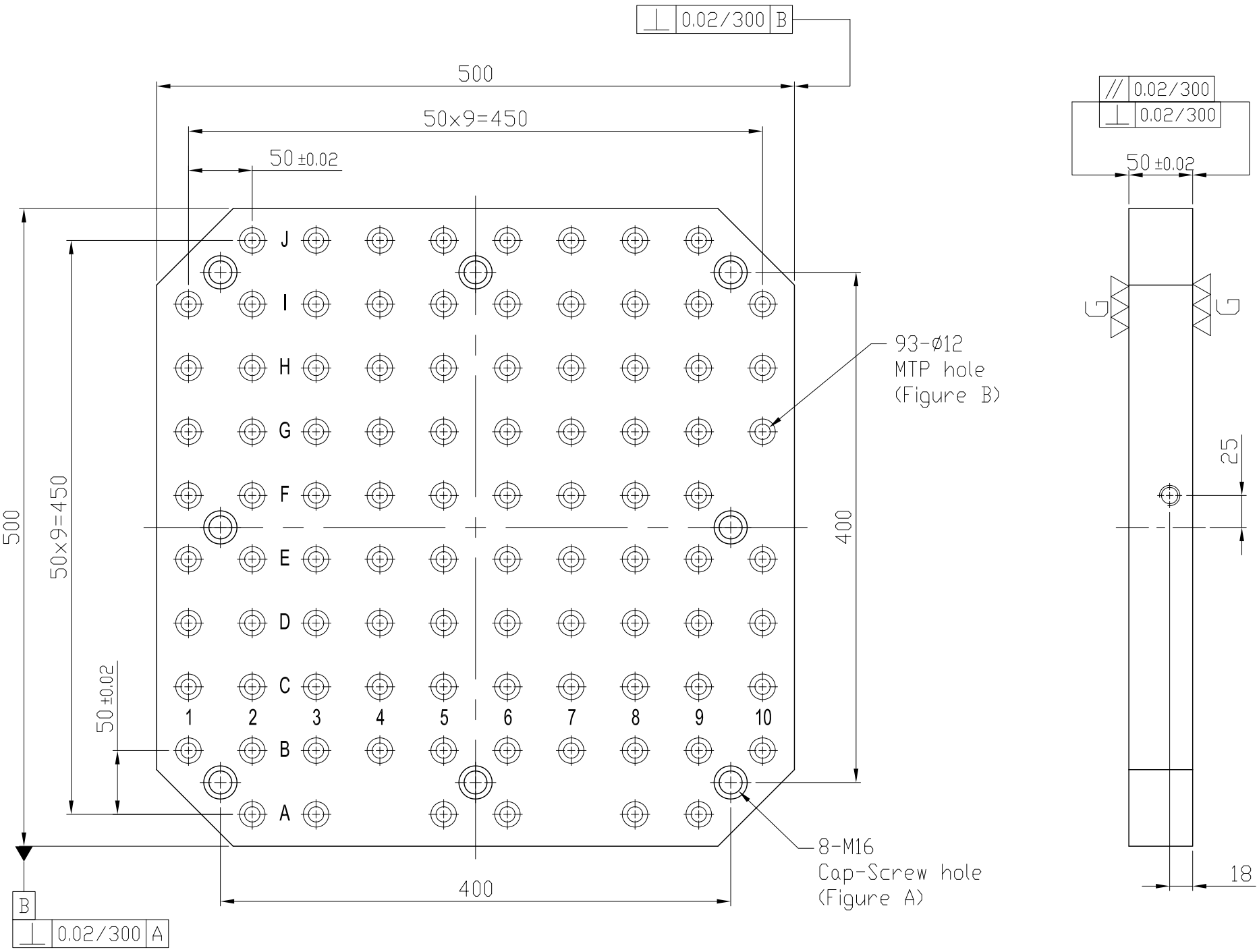

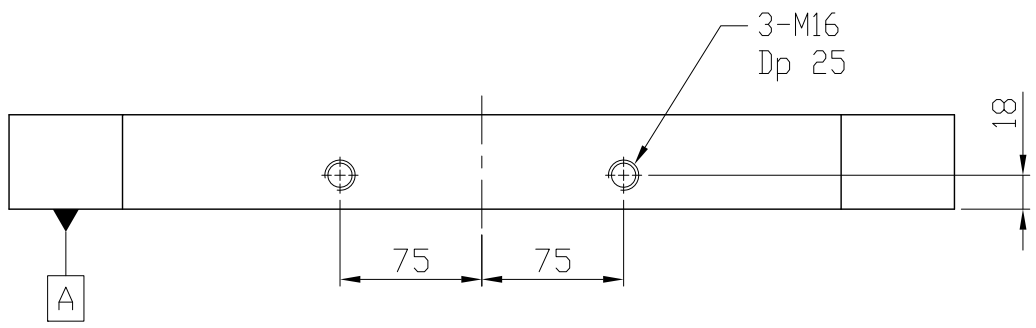

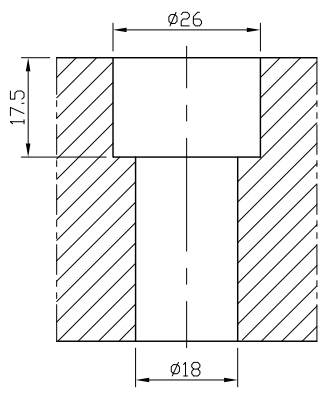

Figure A

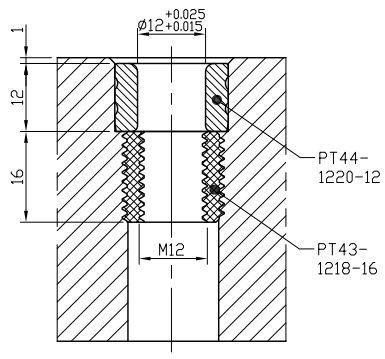

Figure B

*Edge chamfered C2

NW:83KG

Material	Heat treatment	Surface treatment
FC300	Annealing Process	

Drafted by	Checked by	Approved by		Scale	Date	Sheet	Edition
S.C.H				1/1	2011.10.19	1/1	A

LEAVE INDUSTRIAL CO., LTD.

TITLE: M/C BASE PLATE

DWG.NO. BP05-50500-0500-12